Work Order ID 161337

161337

Thursday, May 11, 2017 1:51:40 PM

Item ID: 646.4002 **Accept** *N900040100* **Setup Start** *NS1*

Revision ID:

Item Name: AS350 Wiper Deflector **Stop** *NS2*

Start Date: 5/11/2017 **Start Qty:** 1.00 *1*

Required Date: 5/18/2017 **Req'd Qty:** 1.00 *1*

Reference: SCHEDULED/C

Cust Item ID:

Customer:

Approvals: **Process Plan:** DAS 21 9-89 **Date:** MAY 11 2017 **Tooling:** _____ **Date:** _____

QC: _____ **Date:** _____ **SPC (Y/N):** _____ **Date:** _____

Run Start *NR1*

Stop *NR2*

Sequence ID/ Work Center ID	Operation Description	Set Up/ Run Hours	Tool ID	Tool #	Plan Code	Accept Qty	Reject Qty	Reject Number	Insp. Stamp
Draw Nbr	**Revision Nbr**								
646.4000	C1								

DAS 6 9-89 MAY 11 2017

100 Document Control 0.00

100

DOCUMENT CONTROL

DC **Memo** 0.00

Doc.Control -USB or Paperwork Photocopy bluefile & type labels per PPP 646.4002

DAS 28 9-89 MAY 15 2017

110 Pick Kit 0.00

110

Packaging **Memo** 0.00

Packaging

DAS 6 9-89 MAY 12 2017 DAS 27 9-89

120 QC4- 100% Inspect kits for completeness 0.00

120

QC **Memo** 0.00

Quality Control

DAS 28 9-89 MAY 15 2017

DQA: _____ Date: _____

WORK ORDER NON-CONFORMANCE / UPDATE

QA Closed: Date:

Work Order update only ☐

Work Order: _____

Part No. _____

NCR No.

DISPOSITION

Rework	☐
Scrap	☐
Use-as-is	☐
Suspected Unapproved	☐

AGAINST DEPARTMENT/PROCESS

Skid-tube	☐	Cross tube	☐	Water Jet	☐	Engineering	☐
Machining	☐	Small Fab	☐	Prod. Eng. Coor.	☐	Quality	☐
Thermoforming	☐	Finishing	☐	Rec/Store/Packaging	☐	Other	☐
Large Fab	☐	Composite	☐	Supplier	☐		☐

Date :

Step #:

QTY Effective :

MRB (QSI042) Approval

Description Work Order Deviation

Disposition

Completed By

Lead hand / Supervisor Approval Verification

QC / QA Coordinator Approval

Root Cause

Environment	☐	☐	No Re-verfication
Design	☐	☐	Operator
Doc/Data	☐	☐	Offset/Setup
Equip/Tooling	☐	☐	Supplier
Handling/Pre	☐	☐	Training
Material	☐	☐	Use for Testing
Internal Transport	☐	☐	Poor Information
Tribal Knowledge	☐	☐	Rushing
LOA	☐	☐	Product Improvement
Substation	☐	☐	Process Improvement
Past Expiry Date	☐	☐	Manufacturing Process
Misidentified	☐	☐	Past Due

FAULT CATEGORY

☐	Pressure/Forced	☐	Temperature/Cure	☐	Power Loss/Surge	☐	Positioned Wrong
☐	Bending	☐	Set-up	☐	Folio/Program	☐	Outside Dimensions
☐	Centre Not Concentric	☐	BOM/Route	☐	Grain	☐	Over/Under tolerance
☐	Cracks	☐	Broken/Damage/Defect	☐	Weld	☐	Part Incorrect
☐	Crimp/Kink/Ripple/Wave	☐	Inspection Incomplete/Unqualified	☐	Wrong Stock Pulled	☐	Part Lost/Missing
☐	Cuffs	☐	Contamination	☐	Out of Sequence	☐	Part Moved
☐	Crushing	☐	Countersink	☐	Off-set	☐	Drawing
☐	Heat Treat	☐	Cut Too Short	☐	Mislabeled	☐	Finish
☐	Wave/Twist in Tube	☐	Instructions Incomplete/Unclear	☐	Fit/Function	☐	Misread
☐	Marks/Chatter	☐	Drill Holes	☐	Misaligned/off center	☐	Turning Sequence

☐ OTHER :

Item ID: 646.4002 **Accept** *N900040100* **Setup Start** *NS1*
Revision ID: **Stop** *NS2*
Item Name: AS350 Wiper Deflector
Start Date: 5/11/2017 **Start Qty:** 1.00 *1*
Required Date: 5/18/2017 **Req'd Qty:** 1.00 *1*
Reference: SCHEDULED/C
Cust Item ID:
Customer:

Approvals: **Process Plan:** _____ **Date:** _____ **Tooling:** _____ **Date:** _____
QC: _____ **Date:** _____ **SPC (Y/N):** _____ **Date:** _____

Run Start *NR1*
Stop *NR2*

Sequence ID/ Work Center ID	Operation Description	Set Up/ Run Hours	Tool ID	Tool #	Plan Code	Accept Qty	Reject Qty	Reject Number	Insp. Stamp
130	Identify as per dwg & Stock Location: FG102	0.00							
130	Packaging								
Packaging	**Memo**	0.00				DAS 28 9-89	MAY 15 2017		
Packaging	Identify and pack for shipping as per PPP 646.4002 Location : FG102								
140	QC21- Final Inspection - Work Order Release	0.00							
140						DAS 21 9-89		MAY 15 2017	
QC	**Memo**	0.00							
Quality Control									

DAS 21 9-89 MAY 15 2017

DQA: _____ Date: _____

WORK ORDER NON-CONFORMANCE / UPDATE

QA Closed: Date:

Work Order update only ☐

Work Order: _____

Part No. _____

NCR No.

DISPOSITION

Rework	☐
Scrap	☐
Use-as-is	☐
Suspected Unapproved	☐

AGAINST DEPARTMENT/PROCESS

Skid-tube	☐	Cross tube	☐	Water Jet	☐	Engineering	☐
Machining	☐	Small Fab	☐	Prod. Eng. Coor.	☐	Quality	☐
Thermoforming	☐	Finishing	☐	Rec/Store/Packaging	☐	Other	☐
Large Fab	☐	Composite	☐	Supplier	☐		☐

Date :	Step #:	QTY Effective :	MRB (QSI042) Approval

Description Work Order Deviation	Disposition	Completed By
		Lead hand / Supervisor Approval Verification
		QC / QA Coordinator Approval

Root Cause

Environment	☐	☐	No Re-verfication
Design	☐	☐	Operator
Doc/Data	☐	☐	Offset/Setup
Equip/Tooling	☐	☐	Supplier
Handling/Pre	☐	☐	Training
Material	☐	☐	Use for Testing
Internal Transport	☐	☐	Poor Information
Tribal Knowledge	☐	☐	Rushing
LOA	☐	☐	Product Improvement
Substation	☐	☐	Process Improvement
Past Expiry Date	☐	☐	Manufacturing Process
Misidentified	☐	☐	Past Due

FAULT CATEGORY

☐	Pressure/Forced	☐	Temperature/Cure	☐	Power Loss/Surge	☐	Positioned Wrong
☐	Bending	☐	Set-up	☐	Folio/Program	☐	Outside Dimensions
☐	Centre Not Concentric	☐	BOM/Route	☐	Grain	☐	Over/Under tolerance
☐	Cracks	☐	Broken/Damage/Defect	☐	Weld	☐	Part Incorrect
☐	Crimp/Kink/Ripple/Wave	☐	Inspection Incomplete/Unqualified	☐	Wrong Stock Pulled	☐	Part Lost/Missing
☐	Cuffs	☐	Contamination	☐	Out of Sequence	☐	Part Moved
☐	Crushing	☐	Countersink	☐	Off-set	☐	Drawing
☐	Heat Treat	☐	Cut Too Short	☐	Mislabeled	☐	Finish
☐	Wave/Twist in Tube	☐	Instructions Incomplete/Unclear	☐	Fit/Function	☐	Misread
☐	Marks/Chatter	☐	Drill Holes	☐	Misaligned/off center	☐	Turning Sequence

☐ OTHER :

Picklist Print

Thursday, May 11, 2017 1:51:45 PM

Work Order ID: 161337

161337

Parent Item: 646.4002

646 4002

Parent Item Name: AS350 Wiper Deflector

Start Date: 5/11/2017 **Required Date:** 5/18/2017

Start Qty: 1.00 **Required Qty:** 1.00

Comments: IPP REV:A 12.12.23 NEW ISSUE DD VERF:JLM IPP REV:B
16.01.07 DWG REV.C DD VERF:JLM

Component Item ID/ Item Name	Replacement Item ID	Mfg/ Purch	Bin Item	Primary Location	Last Location	Route Seq ID	Unit of Measure	Qty on Hand	Qty per Kit	Total Qty	Qty Issued	Date Issued	Status
646.3410		Manufactured	No			110	Each	20.0000	1 **	1	MAY 12 2017	DAS 6 9-89 DAS 27 9-89	
646 3410													
LH Wiper Deflector DAS 28 9-89													
				Location				**Loc Qty**	**Loc Code**				
				cck010				20					
					125083			13		1			
					97822			7					
646.3411		Manufactured	No			110	Each	18.0000	1 **	1	MAY 12 2017	DAS 6 9-89 DAS 27 9-89	
646 3411													
RH Wiper Deflector DAS 28 9-89													
				Location				**Loc Qty**	**Loc Code**				
				cck010				18					
					125083			10					
					97823			8		1			
NAS1149F0332P		Purchased	No			110	Each	2,819.000	16 **	16	MAY 12 2017	DAS 6 9-89 DAS 27 9-89	
NAS1149F0332P													
Washer DAS 28 9-89													
				Location				**Loc Qty**	**Loc Code**				
				GA				275					
					m133709			275					
				ST260a				1800					
					m137412			1800					
				ST262				744					
					m137075			744		16			

DQA: _____ Date: _____

WORK ORDER NON-CONFORMANCE / UPDATE

QA Closed: Date: Work Order update only ☐

Work Order: _____

Part No. _____

NCR No.

DISPOSITION

Rework	☐
Scrap	☐
Use-as-is	☐
Suspected Unapproved	☐

AGAINST DEPARTMENT/PROCESS

Skid-tube	☐	Cross tube	☐	Water Jet	☐	Engineering	☐
Machining	☐	Small Fab	☐	Prod. Eng. Coor.	☐	Quality	☐
Thermoforming	☐	Finishing	☐	Rec/Store/Packaging	☐	Other	☐
Large Fab	☐	Composite	☐	Supplier	☐		☐

Date :	Step #:	QTY Effective :	MRB (QSI042) Approval

Description Work Order Deviation	Disposition	Completed By
		Lead hand / Supervisor Approval Verification
		QC / QA Coordinator Approval

Root Cause

Environment	☐	☐	No Re-verfication
Design	☐	☐	Operator
Doc/Data	☐	☐	Offset/Setup
Equip/Tooling	☐	☐	Supplier
Handling/Pre	☐	☐	Training
Material	☐	☐	Use for Testing
Internal Transport	☐	☐	Poor Information
Tribal Knowledge	☐	☐	Rushing
LOA	☐	☐	Product Improvement
Substation	☐	☐	Process Improvement
Past Expiry Date	☐	☐	Manufacturing Process
Misidentified	☐	☐	Past Due

FAULT CATEGORY

☐	Pressure/Forced	☐	Temperature/Cure	☐	Power Loss/Surge	☐	Positioned Wrong
☐	Bending	☐	Set-up	☐	Folio/Program	☐	Outside Dimensions
☐	Centre Not Concentric	☐	BOM/Route	☐	Grain	☐	Over/Under tolerance
☐	Cracks	☐	Broken/Damage/Defect	☐	Weld	☐	Part Incorrect
☐	Crimp/Kink/Ripple/Wave	☐	Inspection Incomplete/Unqualified	☐	Wrong Stock Pulled	☐	Part Lost/Missing
☐	Cuffs	☐	Contamination	☐	Out of Sequence	☐	Part Moved
☐	Crushing	☐	Countersink	☐	Off-set	☐	Drawing
☐	Heat Treat	☐	Cut Too Short	☐	Mislabeled	☐	Finish
☐	Wave/Twist in Tube	☐	Instructions Incomplete/Unclear	☐	Fit/Function	☐	Misread
☐	Marks/Chatter	☐	Drill Holes	☐	Misaligned/off center	☐	Turning Sequence

☐ OTHER :

Work Order ID: 161337
1613337
Parent Item: 646.4002
646 4002
Parent Item Name: AS350 Wiper Deflector

Start Date: 5/11/2017 **Required Date:** 5/18/2017
Start Qty: 1.00 **Required Qty:** 1.00

MS21042L3	Purchased	No		110	Each	1,321.000	6	6

MS21042L3
Nut

**

MAY 12 2017

DAS 6 9-89

DAS 27 9-89

Location	Loc Qty	Loc Code
FP001	91	
m135945	91	
GA	464	
m134360	102	
M136665	362	
ST303	766	
m137321	766	

DAS 28 9-89

MS27039-1-19	Purchased	No		110	Each	457.0000	2	2

MS27039-1-19
Screw

**

MAY 12 2017

DAS 6 9-89

DAS 27 9-89

Location	Loc Qty	Loc Code
GA	80	
m134134	80	
over006	300	
m137361	300	
ST280	77	
m137075	77	

DAS 28 9-89

DQA: _____ Date: _____

WORK ORDER NON-CONFORMANCE / UPDATE

QA Closed: Date:

Work Order update only ☐

Work Order: _____

Part No. _____

NCR No.

DISPOSITION

Rework	☐
Scrap	☐
Use-as-is	☐
Suspected Unapproved	☐

AGAINST DEPARTMENT/PROCESS

Skid-tube	☐	Cross tube	☐	Water Jet	☐	Engineering	☐
Machining	☐	Small Fab	☐	Prod. Eng. Coor.	☐	Quality	☐
Thermoforming	☐	Finishing	☐	Rec/Store/Packaging	☐	Other	☐
Large Fab	☐	Composite	☐	Supplier	☐		☐

Date :	Step #:	QTY Effective :	MRB (QSI042) Approval

Description Work Order Deviation	Disposition	Completed By
		Lead hand / Supervisor Approval Verification
		QC / QA Coordinator Approval

Root Cause

Environment	☐	☐	No Re-verfication
Design	☐	☐	Operator
Doc/Data	☐	☐	Offset/Setup
Equip/Tooling	☐	☐	Supplier
Handling/Pre	☐	☐	Training
Material	☐	☐	Use for Testing
Internal Transport	☐	☐	Poor Information
Tribal Knowledge	☐	☐	Rushing
LOA	☐	☐	Product Improvement
Substation	☐	☐	Process Improvement
Past Expiry Date	☐	☐	Manufacturing Process
Misidentified	☐	☐	Past Due

FAULT CATEGORY

☐	Pressure/Forced	☐	Temperature/Cure	☐	Power Loss/Surge	☐	Positioned Wrong
☐	Bending	☐	Set-up	☐	Folio/Program	☐	Outside Dimensions
☐	Centre Not Concentric	☐	BOM/Route	☐	Grain	☐	Over/Under tolerance
☐	Cracks	☐	Broken/Damage/Defect	☐	Weld	☐	Part Incorrect
☐	Crimp/Kink/Ripple/Wave	☐	Inspection Incomplete/Unqualified	☐	Wrong Stock Pulled	☐	Part Lost/Missing
☐	Cuffs	☐	Contamination	☐	Out of Sequence	☐	Part Moved
☐	Crushing	☐	Countersink	☐	Off-set	☐	Drawing
☐	Heat Treat	☐	Cut Too Short	☐	Mislabeled	☐	Finish
☐	Wave/Twist in Tube	☐	Instructions Incomplete/Unclear	☐	Fit/Function	☐	Misread
☐	Marks/Chatter	☐	Drill Holes	☐	Misaligned/off center	☐	Turning Sequence

☐ OTHER :

Work Order ID: 161337
161337
Parent Item: 646.4002
646 4002
Parent Item Name: AS350 Wiper Deflector

Start Date: 5/11/2017 **Required Date:** 5/18/2017
Start Qty: 1.00 **Required Qty:** 1.00

MS27039-1-18	Purchased	No		110	Each	1,624.000	**

MS27039-1-18
Screw

Location	Loc Qty	Loc Code
GA	239	
123522	39	
124326	200	
over006	1200	
124326	1200	
ST280	185	
124326	185	

DAS 28 9-89

2 2 DAS 6 9-89 MAY 12 2017 DAS 27 9-89

646.3814	Manufactured	No		110	Each	4.0000	**

646 3814
Wiper Bracket

Location	Loc Qty	Loc Code
CCK106	4	
125083	4	

DAS 28 9-89

2 2 DAS 6 9-89 MAY 12 2017 DAS 27 9-89

600.1012	Purchased	No		110	Each	27.0000	**

600 1012
Sealant PR1425B2 (#654 sem)

Location	Loc Qty	Loc Code
cck017	27	
m136838	1	
m1370073	4	
m137321	8	
m137371	14	

11/17 DAS 28 9-89

1 1 MAY 12 2017 DAS 27 9-89 DAS 6 9-89

DQA: _____ Date: _____

WORK ORDER NON-CONFORMANCE / UPDATE

QA Closed: Date:

Work Order update only ☐

Work Order: _____

Part No. _____

NCR No.

DISPOSITION

Rework	☐
Scrap	☐
Use-as-is	☐
Suspected Unapproved	☐

AGAINST DEPARTMENT/PROCESS

Skid-tube	☐	Cross tube	☐	Water Jet	☐	Engineering	☐
Machining	☐	Small Fab	☐	Prod. Eng. Coor.	☐	Quality	☐
Thermoforming	☐	Finishing	☐	Rec/Store/Packaging	☐	Other	☐
Large Fab	☐	Composite	☐	Supplier	☐		☐

Date :	Step #:	QTY Effective :	MRB (QSI042) Approval

Description Work Order Deviation	Disposition	Completed By
		Lead hand / Supervisor Approval Verification
		QC / QA Coordinator Approval

Root Cause

Environment	☐	☐	No Re-verfication
Design	☐	☐	Operator
Doc/Data	☐	☐	Offset/Setup
Equip/Tooling	☐	☐	Supplier
Handling/Pre	☐	☐	Training
Material	☐	☐	Use for Testing
Internal Transport	☐	☐	Poor Information
Tribal Knowledge	☐	☐	Rushing
LOA	☐	☐	Product Improvement
Substation	☐	☐	Process Improvement
Past Expiry Date	☐	☐	Manufacturing Process
Misidentified	☐	☐	Past Due

FAULT CATEGORY

☐	Pressure/Forced	☐	Temperature/Cure	☐	Power Loss/Surge	☐	Positioned Wrong
☐	Bending	☐	Set-up	☐	Folio/Program	☐	Outside Dimensions
☐	Centre Not Concentric	☐	BOM/Route	☐	Grain	☐	Over/Under tolerance
☐	Cracks	☐	Broken/Damage/Defect	☐	Weld	☐	Part Incorrect
☐	Crimp/Kink/Ripple/Wave	☐	Inspection Incomplete/Unqualified	☐	Wrong Stock Pulled	☐	Part Lost/Missing
☐	Cuffs	☐	Contamination	☐	Out of Sequence	☐	Part Moved
☐	Crushing	☐	Countersink	☐	Off-set	☐	Drawing
☐	Heat Treat	☐	Cut Too Short	☐	Mislabeled	☐	Finish
☐	Wave/Twist in Tube	☐	Instructions Incomplete/Unclear	☐	Fit/Function	☐	Misread
☐	Marks/Chatter	☐	Drill Holes	☐	Misaligned/off center	☐	Turning Sequence

☐ OTHER :

Work Order ID: 161337
161337
Parent Item: 646.4002
646 4002
Parent Item Name: AS350 Wiper Deflector

Start Date: 5/11/2017 **Required Date:** 5/18/2017
Start Qty: 1.00 **Required Qty:** 1.00

MS24694-S53	Purchased	No		110	Each	257.0000	2

MS24694-S53
SCREW

**

2

MAY 1 2 2017

DAS 6 9-89

DAS 27 9-89

DAS 28 9-89

Location	Loc Qty	Loc Code
ST284	257	
113359	257	

2

DQA: _____ Date: _____

WORK ORDER NON-CONFORMANCE / UPDATE

QA Closed: Date:

Work Order update only ☐

Work Order: _____

Part No. _____

NCR No.

DISPOSITION

Rework	☐
Scrap	☐
Use-as-is	☐
Suspected Unapproved	☐

AGAINST DEPARTMENT/PROCESS

Skid-tube	☐	Cross tube	☐	Water Jet	☐	Engineering	☐
Machining	☐	Small Fab	☐	Prod. Eng. Coor.	☐	Quality	☐
Thermoforming	☐	Finishing	☐	Rec/Store/Packaging	☐	Other	☐
Large Fab	☐	Composite	☐	Supplier	☐		☐

Date :	Step #:	QTY Effective :	MRB (QSI042) Approval

Description Work Order Deviation	Disposition	Completed By
		Lead hand / Supervisor Approval Verification
		QC / QA Coordinator Approval

Root Cause

Environment	☐	☐	No Re-verfication
Design	☐	☐	Operator
Doc/Data	☐	☐	Offset/Setup
Equip/Tooling	☐	☐	Supplier
Handling/Pre	☐	☐	Training
Material	☐	☐	Use for Testing
Internal Transport	☐	☐	Poor Information
Tribal Knowledge	☐	☐	Rushing
LOA	☐	☐	Product Improvement
Substation	☐	☐	Process Improvement
Past Expiry Date	☐	☐	Manufacturing Process
Misidentified	☐	☐	Past Due

FAULT CATEGORY

☐	Pressure/Forced	☐	Temperature/Cure	☐	Power Loss/Surge	☐	Positioned Wrong
☐	Bending	☐	Set-up	☐	Folio/Program	☐	Outside Dimensions
☐	Centre Not Concentric	☐	BOM/Route	☐	Grain	☐	Over/Under tolerance
☐	Cracks	☐	Broken/Damage/Defect	☐	Weld	☐	Part Incorrect
☐	Crimp/Kink/Ripple/Wave	☐	Inspection Incomplete/Unqualified	☐	Wrong Stock Pulled	☐	Part Lost/Missing
☐	Cuffs	☐	Contamination	☐	Out of Sequence	☐	Part Moved
☐	Crushing	☐	Countersink	☐	Off-set	☐	Drawing
☐	Heat Treat	☐	Cut Too Short	☐	Mislabeled	☐	Finish
☐	Wave/Twist in Tube	☐	Instructions Incomplete/Unclear	☐	Fit/Function	☐	Misread
☐	Marks/Chatter	☐	Drill Holes	☐	Misaligned/off center	☐	Turning Sequence

☐ OTHER :

DART AEROSPACE

APICAL INDUSTRIES, INC.
dba DART AEROSPACE

ENGINEERING CHANGE NOTICE NO. 05304				SHEET 1 OF 1
DWG NO. 646.4000	REV: C	PREPARED BY J. BECKER	DATE: 02/04/16	EFFECT ON DWG ☐ INC. ☒ UNINC.
DWG TITLE: AS350 CABLE CUTTERS KIT				
APPROVED BY: ENGR	MFG	QC		EFF. NEXT ORDER

TRANSACTION CODES (TC):
A-ADD C-CREATE
R-REVISE D-DELETE

REASON: REVISED F/N 12.

ECR: N/A

ACTION ITEM:
1. N/A

SHOP COPY
RETURN TO
ENGINEERING
UNCONTROLLED COPY
SUBJECT TO AMENDMENT
WITHOUT NOTICE
WORK ORDER
NO. 161337 MJ
12-05-11

SHEET 1, BOM IS:

F/N	TC	PART NUMBER	QTY 4006	QTY 4005	DESCRIPTION	MATERIAL	SPECIFICATION
12	R	601.1624	8	16	LOCKNUT	MS21042L3	

DOCUMENTS EFFECTED: ☐ PATTERN ☐ MDL ☐ INSTALL INSTRUCTIONS ☐ ICA ☐ FMS ☒ BOM

CHANGE CATEGORY ☐ MAJOR ☒ MINOR

DER REVIEW REQUIRED ☐ YES ☒ NO

DQA: _____ Date: _____

WORK ORDER NON-CONFORMANCE / UPDATE

QA Closed: Date: Work Order update only ☐

Work Order: _____

Part No. _____

NCR No.

DISPOSITION

Rework ☐
Scrap ☐
Use-as-is ☐
Suspected Unapproved ☐

AGAINST DEPARTMENT/PROCESS

Skid-tube	☐	Cross tube	☐	Water Jet	☐	Engineering	☐
Machining	☐	Small Fab	☐	Prod. Eng. Coor.	☐	Quality	☐
Thermoforming	☐	Finishing	☐	Rec/Store/Packaging	☐	Other	☐
Large Fab	☐	Composite	☐	Supplier	☐		

Date :	Step #:	QTY Effective :	MRB (QSI042) Approval

Description Work Order Deviation	Disposition	Completed By
		Lead hand / Supervisor Approval Verification
		QC / QA Coordinator Approval

Root Cause

Environment	☐	☐	No Re-verfication
Design	☐	☐	Operator
Doc/Data	☐	☐	Offset/Setup
Equip/Tooling	☐	☐	Supplier
Handling/Pre	☐	☐	Training
Material	☐	☐	Use for Testing
Internal Transport	☐	☐	Poor Information
Tribal Knowledge	☐	☐	Rushing
LOA	☐	☐	Product Improvement
Substation	☐	☐	Process Improvement
Past Expiry Date	☐	☐	Manufacturing Process
Misidentified	☐	☐	Past Due

FAULT CATEGORY

☐	Pressure/Forced	☐	Temperature/Cure	☐	Power Loss/Surge	☐	Positioned Wrong
☐	Bending	☐	Set-up	☐	Folio/Program	☐	Outside Dimensions
☐	Centre Not Concentric	☐	BOM/Route	☐	Grain	☐	Over/Under tolerance
☐	Cracks	☐	Broken/Damage/Defect	☐	Weld	☐	Part Incorrect
☐	Crimp/Kink/Ripple/Wave	☐	Inspection Incomplete/Unqualified	☐	Wrong Stock Pulled	☐	Part Lost/Missing
☐	Cuffs	☐	Contamination	☐	Out of Sequence	☐	Part Moved
☐	Crushing	☐	Countersink	☐	Off-set	☐	Drawing
☐	Heat Treat	☐	Cut Too Short	☐	Mislabeled	☐	Finish
☐	Wave/Twist in Tube	☐	Instructions Incomplete/Unclear	☐	Fit/Function	☐	Misread
☐	Marks/Chatter	☐	Drill Holes	☐	Misaligned/off center	☐	Turning Sequence

☐ OTHER :

THE INFORMATION CONTAINED IN THIS DRAWING IS THE SOLE PROPERTY OF APICAL INDUSTRIES DBA DART AEROSPACE. ANY REPRODUCTION IN PART OR WHOLE WITHOUT THE EXPLICIT WRITTEN PERMISSION OF APICAL INDUSTRIES DBA DART AEROSPACE IS PROHIBITED.

NOTES:

1. AFTER INSTALLATION, APPLY F/N 54 A/R TO FILL GAPS AND FILLET EDGES.
2. INSTALL F/N 14 WITH F/N 52 & 53.
3. 3M VHB ADHESIVE TAPE .025" THICK X .50" WIDE
   VENDOR: MCMASTER-CARR P/N 75935A651.
4. 3M TAPE PRIMER 94. APPLY TO BOTH SURFACES A/R BEFORE TAPE.
   VENDOR: R.S. HUGHES P/N 021200-24216.
5. REUSE FASTENERS FROM F/N 1.
6. USE WASHERS A/R AS SHIMS TO OBTAIN BEST FITMENT.
7. AT CUSTOMERS OPTION, INSTALL F/N 65 BY MATCH DRILLING ON TO F/N 1.
8. INSTALL SHIM IF OEM PROVISIONS ARE INSTALLED ON AIRCRAFT. REMOVE SHIM LAYERS TO ACHIEVE CORRECT SIZE. MATCH DRILL HOLES. USE F/N 78 SCREW IN PLACE OF F/N 17 SCREW.
9. NEWER INSTALLATIONS ON AIRCRAFT WITH UPDATED CANOPY MAY REQUIRE DIFFERENT LENGTH SCREWS. USE F/N 62 TO REPLACE F/N 44 & F/N 26 IN PLACE OF F/N 41 WHEN NECESSARY.

UNINCORPORATED ECN(s)

05304

REVISIONS			
REV.	DESCRIPTION	DATE	APPROVED
A	INCORPORATED ECNS 02199, 02351, 02719 & 02765	02/08/2010	P. BRAVO
B	INCORPORATED ECN 03046, 03079 & 04731	11/04/2014	P. BRAVO
C	INCORPORATED ECN 05398	08/07/2015	P. BRAVO

			2		2	41	601.2829	SCREW	MS24694S54	
			2		2	40	601.2831	RIVET	MS25426AD5-7	
			1		1	39	646.3716	GAUGE BRACKET		
			6		6	38	601.1953	SCREW	MS27039-1-12	
		2			2	37	646.3715	STRUT DOUBLER		
	2		2		2	36	601.2824	BOLT	AN3-5A	
12		36			36	35	601.2277	RIVET	DCR26455-8-02	
6		18			18	34	600.0795	NUTPLATE	MS21047-3	
3		3			3	33	601.2565	RIVET	MS20470AD5-7	
1		1			1	32	646.3813	STRUT BRACKET		
4		4			4	31	601.2822	BOLT	AN3-3A	
2		2			2	30	646.3812	GUSSET BRACKET		
8		8			8	29	601.2564	RIVET	MS20470AD5-6	
1		1			1	28	646.3714	GUSSET		
	1		1		1	27	646.3610	FILLER		
	3		3		3	26	601.2830	SCREW	MS24694S55	
	2		2		2	25	601.2825	BOLT	AN3-6A	
	1		1		1	24	646.3811	RADIUS BLOCK		
	1		1		1	23	646.3712	CLIP		
	1		1		1	22	646.3711	CLIP		
8		8			8	21	601.2832	RIVET	MS20470AD5-5.5	
14		14			14	20	601.2020	RIVET	CR3213-5-3	
4	6	4	6		10	19	601.2823	BOLT	AN3-4A	
	1		1		1	18	601.2827	BOLT	AN3-13A	
	5		5		5	17	601.2912	SCREW	MS24694S61	
1		1			1	16	646.3713	GUSSET		
1		1			1	15	646.3210	SUPPORT		
		1			1	14	646.3710	DOUBLER		
	1		1		1	13	646.3110	CHANNEL		
14	10	8	53	6	61	12	601.1624	LOCKNUT	MS21042L3	
16	32	18	120	16	144	11	601.1607	WASHER	NAS1149F0332P	
				1		10	646.3410	LH WIPER DEFLECTOR		
				1		9	646.3411	RH WIPER DEFLECTOR		
			2		2	8	647.7703	STRUT ASSY		
			2		2	7	647.0112	STRUT BRACKET		
	1		1		1	6	646.3511	STRUT		
	1		1		1	5	646.3510	STRUT		
2		2			2	4	646.3810	BRACKET		
					1	3	646.2910	DEFLECTOR		
	1		1		1	2	646.3001	LOWER CUTTER ASSY		
			1		1	1	646.3301	UPPER CUTTER ASSY		
X							646.4006	LOWER CUTTER FIXED PROVISIONS		
	X						646.4005	LOWER CUTTER REMOVABLE PROVISIONS		
		X					646.4004	FIXED PROVISIONS KIT		
			X				646.4003	CAMS CUTTERS FIT WITHOUT FIXED PROVISIONS		
				X			646.4002	AS350 WIPER DEFLECTOR KIT		
					X		646.4001	AS350 CABLE CUTTERS KIT		
4006	4005	4004	4003	4002	4001	FIND #	PART #	DESCRIPTION	MATL	SPEC.

	5		5		5	78	601.3875	SCREW		
	1		1		1	77	646.9410	SHIM		
			4		4	76	601.2764	WASHER		
			2		2	75	601.2973	LOCKNUT	MS21042-08	
			2		2	74	601.2988	SCREW	MS24039-0815	
			2		2	73	601.2943	LOCKNUT	MS21042-3	
			2		2	72	601.3128	NUT	AN316C4R	
			2		2	71	601.3209	LOCKNUT	MS21042L4	
			4		4	70	601.2638	WASHER	NAS1149F0432P	
			2		2	69	601.2669	BOLT	AN4C7A	
			2		2	68	601.3119	CLEVIS	AN665 34R	
			2		2	67	601.3121	EYE BOLT	AN44-5A	
			2		2	66	650.9201	EYE BRACKET ASSY		
		REF	REF		REF	65	647.5701	GPS MOUNT KIT		
					2	64	601.3151	WASHER	NAS1149F0363P	
				2		63	601.2911	SCREW	MS24694S53	
			24		24	62	601.2637	SCREW	MS27039-1-16	
	2		2		2	61	601.2763	BOLT	AN3-12A	
			1		1	60	646.3913	SHIM		
			4		4	59	646.3912	SHIM		
			1		1	58	646.3911	SHIM		
			4		4	57	646.3910	SHIM		
			5		5	56	600.1013	PRIMER		
			8 FT		8 FT	55	600.0129	VHB TAPE		
			1	1	1	54	600.1012	SEALANT	PR-1425 CLASS B	
			1		1	53	600.0991	MAGNOBOND 6398 PART B		
			1		1	52	600.0990	MAGNOBOND 6398 PART A		
	6		10		10	51	601.2826	BOLT	AN3-11A	
				2		50	646.3814	WIPER BRACKET		
				2		49	601.2910	SCREW	MS27039-1-18	
		2			2	48	601.1365	SCREW	MS27039-1-10	
		2			2	47	646.3719	DOUBLER		
			2		2	46	646.3718	CUSTOM WASHER		
		1			1	45	646.3717	DOUBLER		
			22	2	22	44	601.1948	SCREW	MS27039-1-19	
			2		2	43	601.1952	SCREW	MS27039-1-20	
			4		4	42	601.1956	SCREW	MS27039-1-21	
4006	4005	4004	4003	4002	4001	FIND #	PART #	DESCRIPTION	MATL	SPEC.

QTY

PARTS LIST

NEXT ASSY (S)

ORIGIN - DATE (MO-DA-YR) 08-27-08
DRAWN BY: P. BRAVO
CHECKED
DRAWING APPROVAL: P. BRAVO 08-27-08
CONTRACT No.

UNLESS OTHERWISE SPECIFIED DIMENSIONS ARE IN INCHES
TOLERANCES ARE
2 PLACE DECIMALS ±.010
3 PLACE DECIMALS ±.005
ANGLES ± 2°

SIZE B | CAGE CODE 07M26 | DWG. NO. 646.4000 | REV. C

SCALE NONE | SHEET 1 OF 5

DART AEROSPACE
APICAL INDUSTRIES, INC. dba DART AEROSPACE
3030 ENTERPRISE CT., SUITE A
VISTA, CA. 92081
(760)-724-5300

AS350 CABLE CUTTERS KIT

DQA: _____ Date: _____

WORK ORDER NON-CONFORMANCE / UPDATE

DART AEROSPACE

QA Closed: Date: Work Order update only ☐

Work Order: _____

Part No. _____

NCR No.

DISPOSITION

Rework ☐
Scrap ☐
Use-as-is ☐
Suspected Unapproved ☐

AGAINST DEPARTMENT/PROCESS

Skid-tube ☐	Cross tube ☐	Water Jet ☐	Engineering ☐
Machining ☐	Small Fab ☐	Prod. Eng. Coor. ☐	Quality ☐
Thermoforming ☐	Finishing ☐	Rec/Store/Packaging ☐	Other ☐
Large Fab ☐	Composite ☐	Supplier ☐	

Date :	Step #:	QTY Effective :	**MRB (QSI042) Approval**

Description Work Order Deviation	**Disposition**	**Completed By**
		Lead hand / Supervisor Approval Verification
		QC / QA Coordinator Approval

Root Cause

Environment ☐	☐	No Re-verfication
Design ☐	☐	Operator
Doc/Data ☐	☐	Offset/Setup
Equip/Tooling ☐	☐	Supplier
Handling/Pre ☐	☐	Training
Material ☐	☐	Use for Testing
Internal Transport ☐	☐	Poor Information
Tribal Knowledge ☐	☐	Rushing
LOA ☐	☐	Product Improvement
Substation ☐	☐	Process Improvement
Past Expiry Date ☐	☐	Manufacturing Process
Misidentified ☐	☐	Past Due

FAULT CATEGORY

☐ Pressure/Forced	☐ Temperature/Cure	☐ Power Loss/Surge	☐ Positioned Wrong
☐ Bending	☐ Set-up	☐ Folio/Program	☐ Outside Dimensions
☐ Centre Not Concentric	☐ BOM/Route	☐ Grain	☐ Over/Under tolerance
☐ Cracks	☐ Broken/Damage/Defect	☐ Weld	☐ Part Incorrect
☐ Crimp/Kink/Ripple/Wave	☐ Inspection Incomplete/Unqualified	☐ Wrong Stock Pulled	☐ Part Lost/Missing
☐ Cuffs	☐ Contamination	☐ Out of Sequence	☐ Part Moved
☐ Crushing	☐ Countersink	☐ Off-set	☐ Drawing
☐ Heat Treat	☐ Cut Too Short	☐ Mislabeled	☐ Finish
☐ Wave/Twist in Tube	☐ Instructions Incomplete/Unclear	☐ Fit/Function	☐ Misread
☐ Marks/Chatter	☐ Drill Holes	☐ Misaligned/off center	☐ Turning Sequence

☐ OTHER :

THE INFORMATION CONTAINED IN THIS DRAWING IS THE SOLE PROPERTY OF APICAL INDUSTRIES DBA DART AEROSPACE. ANY REPRODUCTION IN PART OR WHOLE WITHOUT THE EXPLICIT WRITTEN PERMISSION OF APICAL INDUSTRIES DBA DART AEROSPACE IS PROHIBITED.

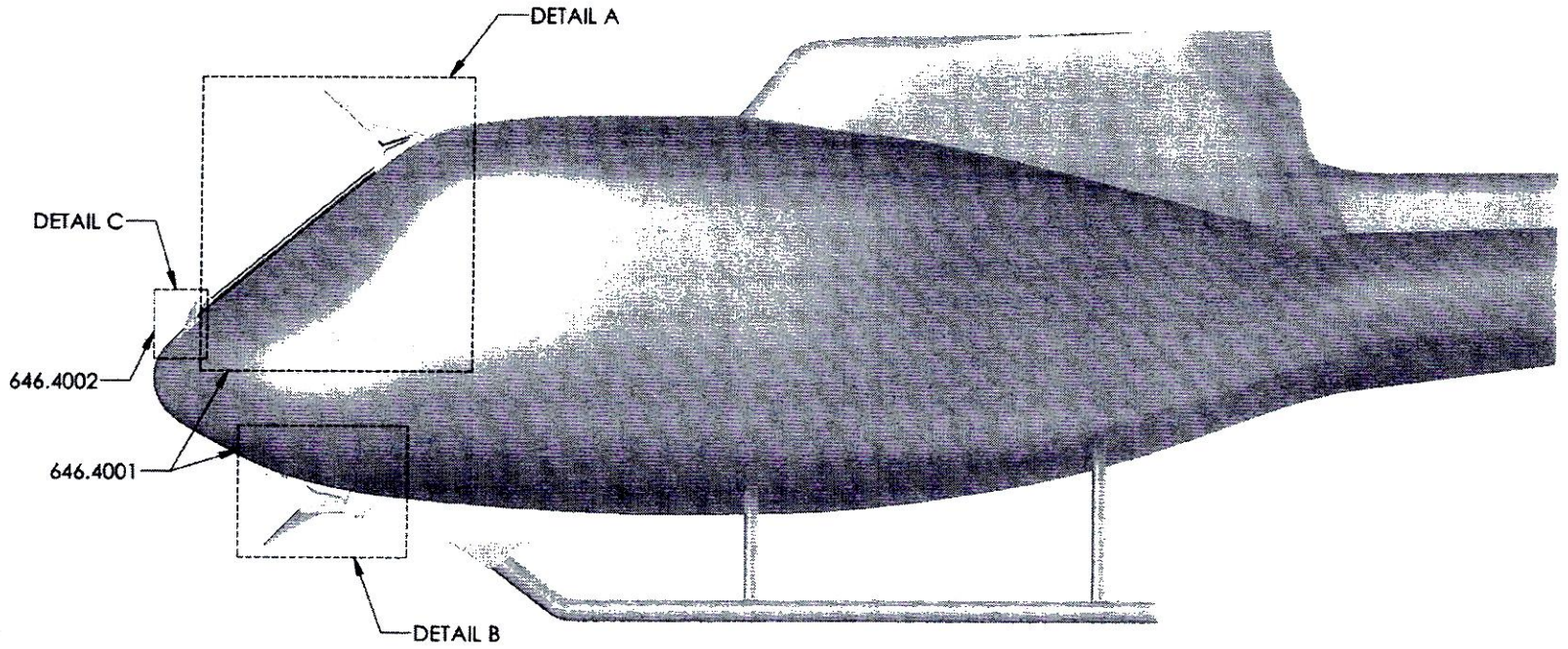

ORIGINAL DATE (MO-DA-YR) 08-27-08	DART AEROSPACE APICAL INDUSTRIES, INC. dba DART AEROSPACE 3030 ENTERPRISE CT., SUITE A VISTA, CA. 92081 (760)-724-5300
DRAWN BY S. HUFF / CHECKER P. BRAVO	
DRAWING APPROVAL P. BRAVO 08-27-08	
CONTRACT No.	AS350 CABLE CUTTERS KIT
UNLESS OTHERWISE SPECIFIED DIMENSIONS ARE IN INCHES TOLERANCES ARE: 2 PLACE DECIMALS ±.010 3 PLACE DECIMALS ±.005 ANGLES ± .5°	SIZE B / CAGE CODE 07MZ6 / DWG. NO. 646.4000 / REV C
	SCALE NONE / SHEET 2 OF 5

DQA: _____ Date: _____

WORK ORDER NON-CONFORMANCE / UPDATE

QA Closed: Date: Work Order update only ☐

Work Order: _____

Part No. _____

NCR No.

DISPOSITION

Rework	☐
Scrap	☐
Use-as-is	☐
Suspected Unapproved	☐

AGAINST DEPARTMENT/PROCESS

Skid-tube	☐	Cross tube	☐	Water Jet	☐	Engineering	☐
Machining	☐	Small Fab	☐	Prod. Eng. Coor.	☐	Quality	☐
Thermoforming	☐	Finishing	☐	Rec/Store/Packaging	☐	Other	☐
Large Fab	☐	Composite	☐	Supplier	☐		☐

Date :

Step #:

QTY Effective :

MRB (QSI042) Approval

Description Work Order Deviation

Disposition

Completed By

Lead hand / Supervisor Approval Verification

QC / QA Coordinator Approval

Root Cause

Environment	☐	☐	No Re-verfication
Design	☐	☐	Operator
Doc/Data	☐	☐	Offset/Setup
Equip/Tooling	☐	☐	Supplier
Handling/Pre	☐	☐	Training
Material	☐	☐	Use for Testing
Internal Transport	☐	☐	Poor Information
Tribal Knowledge	☐	☐	Rushing
LOA	☐	☐	Product Improvement
Substation	☐	☐	Process Improvement
Past Expiry Date	☐	☐	Manufacturing Process
Misidentified	☐	☐	Past Due

FAULT CATEGORY

☐	Pressure/Forced	☐	Temperature/Cure	☐	Power Loss/Surge	☐	Positioned Wrong
☐	Bending	☐	Set-up	☐	Folio/Program	☐	Outside Dimensions
☐	Centre Not Concentric	☐	BOM/Route	☐	Grain	☐	Over/Under tolerance
☐	Cracks	☐	Broken/Damage/Defect	☐	Weld	☐	Part Incorrect
☐	Crimp/Kink/Ripple/Wave	☐	Inspection Incomplete/Unqualified	☐	Wrong Stock Pulled	☐	Part Lost/Missing
☐	Cuffs	☐	Contamination	☐	Out of Sequence	☐	Part Moved
☐	Crushing	☐	Countersink	☐	Off-set	☐	Drawing
☐	Heat Treat	☐	Cut Too Short	☐	Mislabeled	☐	Finish
☐	Wave/Twist in Tube	☐	Instructions Incomplete/Unclear	☐	Fit/Function	☐	Misread
☐	Marks/Chatter	☐	Drill Holes	☐	Misaligned/off center	☐	Turning Sequence

☐ OTHER :

THE INFORMATION CONTAINED IN THIS DRAWING IS THE SOLE PROPERTY OF APICAL INDUSTRIES DBA DART AEROSPACE. ANY REPRODUCTION IN PART OR WHOLE WITHOUT THE WRITTEN PERMISSION OF APICAL INDUSTRIES DBA DART AEROSPACE IS PROHIBITED.

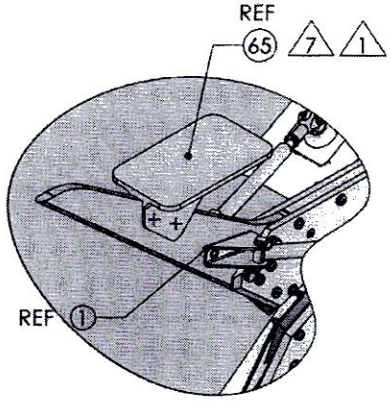

DETAIL D
TYPICAL GPS MOUNT KIT INSTALLATION

DETAIL D

51 2 PL
11 4 PL
73 2 PL
62 2PL
11 2PL
69 2 PL
71 2 PL
70 4 PL
66 2 PL
67 2 PL
5
8 2 PL
38 6PL
11 6PL
14 1 2
2 PL 64
48 2PL
11 2PL
2 PL 7
2 PL 74
4 PL 75
4 PL 76
1 1
2 PL 51
4PL 11
2 PL 12
2 PL 68
2 PL 72
47 2PL
35 4PL
34 2PL
37 2PL
35 12PL
34 6PL
42 4PL
11 8PL
12 4PL
57 A/R
58 A/R
45
35 4PL
34 2PL
43 2PL
11 4PL
12 2PL
1 3
3 55
4 56
44 OR 62 22 PL 9
11 44PL
12 22PL
2PL 40
9 2 PL 26 OR 41
2 PL 12
2 PL 46
A/R 59
A/R 60
39

DETAIL A
SHOWN ISOMETRICALLY

ORIGINAL DATE (MO-DA-YR)	08-27-08	DART AEROSPACE APICAL INDUSTRIES, INC. dba DART AEROSPACE	3030 ENTERPRISE CT., SUITE A VISTA, CA 92081 (760)-724-5300
DRAWN BY: S. HUFF	CHECKER P. BRAVO		
DRAWING APPROVAL P. BRAVO	08-27-08		
CONTRACT NO.		AS350 CABLE CUTTERS KIT	
UNLESS OTHERWISE SPECIFIED DIMENSIONS ARE IN INCHES TOLERANCES ARE: 2 PLACE DECIMALS ±.01 3 PLACE DECIMALS ±.005 ANGLES ± .5°		SIZE B / CAGE CODE 07MZ6 / DWG. NO. 646.4000 / REV C	
		SCALE NONE	SHEET 3 OF 5

DQA: _____ Date: _____

WORK ORDER NON-CONFORMANCE / UPDATE

QA Closed: Date: Work Order update only ☐

Work Order: _____

Part No. _____

NCR No.

DISPOSITION

Rework	☐
Scrap	☐
Use-as-is	☐
Suspected Unapproved	☐

AGAINST DEPARTMENT/PROCESS

Skid-tube	☐	Cross tube	☐	Water Jet	☐	Engineering	☐
Machining	☐	Small Fab	☐	Prod. Eng. Coor.	☐	Quality	☐
Thermoforming	☐	Finishing	☐	Rec/Store/Packaging	☐	Other	☐
Large Fab	☐	Composite	☐	Supplier	☐		☐

Date :	Step #:	QTY Effective :	MRB (QSI042) Approval

Description Work Order Deviation	Disposition	Completed By
		Lead hand / Supervisor Approval Verification
		QC / QA Coordinator Approval

Root Cause

Environment	☐	☐	No Re-verfication
Design	☐	☐	Operator
Doc/Data	☐	☐	Offset/Setup
Equip/Tooling	☐	☐	Supplier
Handling/Pre	☐	☐	Training
Material	☐	☐	Use for Testing
Internal Transport	☐	☐	Poor Information
Tribal Knowledge	☐	☐	Rushing
LOA	☐	☐	Product Improvement
Substation	☐	☐	Process Improvement
Past Expiry Date	☐	☐	Manufacturing Process
Misidentified	☐	☐	Past Due

FAULT CATEGORY

☐	Pressure/Forced	☐	Temperature/Cure	☐	Power Loss/Surge	☐	Positioned Wrong
☐	Bending	☐	Set-up	☐	Folio/Program	☐	Outside Dimensions
☐	Centre Not Concentric	☐	BOM/Route	☐	Grain	☐	Over/Under tolerance
☐	Cracks	☐	Broken/Damage/Defect	☐	Weld	☐	Part Incorrect
☐	Crimp/Kink/Ripple/Wave	☐	Inspection Incomplete/Unqualified	☐	Wrong Stock Pulled	☐	Part Lost/Missing
☐	Cuffs	☐	Contamination	☐	Out of Sequence	☐	Part Moved
☐	Crushing	☐	Countersink	☐	Off-set	☐	Drawing
☐	Heat Treat	☐	Cut Too Short	☐	Mislabeled	☐	Finish
☐	Wave/Twist in Tube	☐	Instructions Incomplete/Unclear	☐	Fit/Function	☐	Misread
☐	Marks/Chatter	☐	Drill Holes	☐	Misaligned/off center	☐	Turning Sequence

☐ OTHER :

THE INFORMATION CONTAINED IN THIS DRAWING IS THE SOLE PROPERTY OF APICAL INDUSTRIES DBA DART AEROSPACE. ANY REPRODUCTION IN PART OR WHOLE WITHOUT THE EXPLICIT WRITTEN PERMISSION OF APICAL INDUSTRIES DBA DART AEROSPACE IS PROHIBITED.

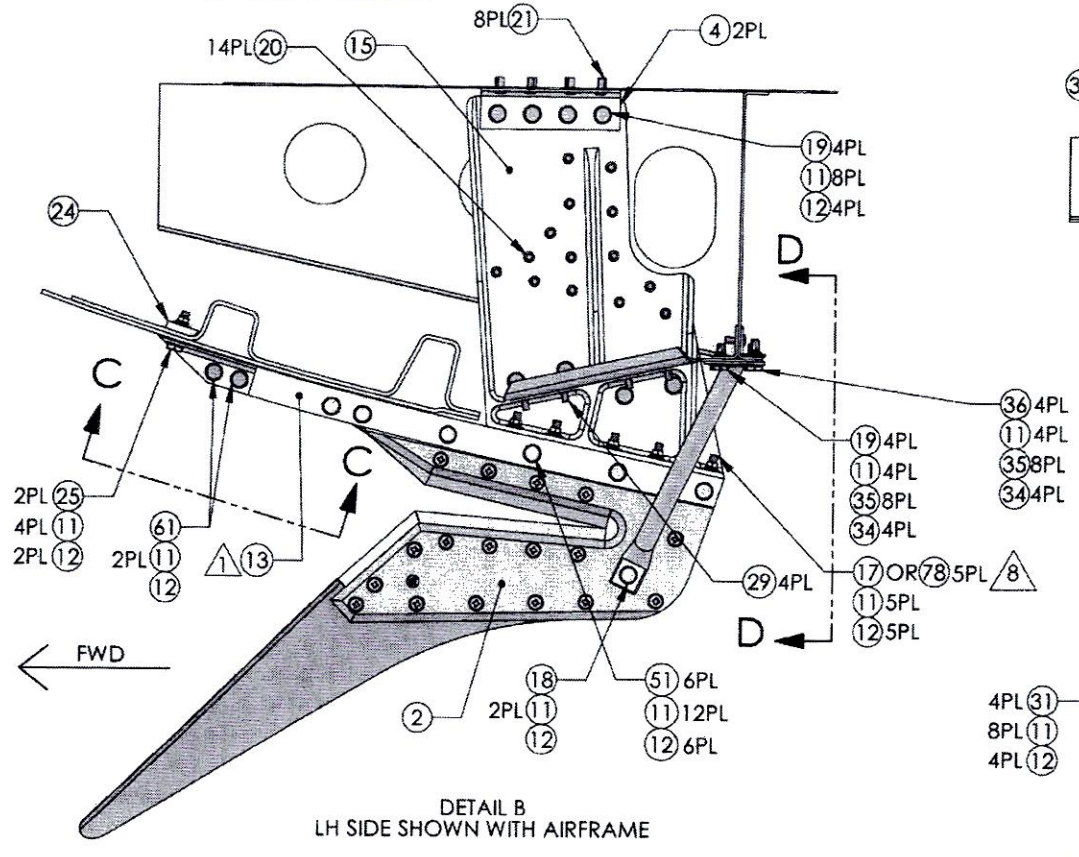

DETAIL B
LH SIDE SHOWN WITH AIRFRAME

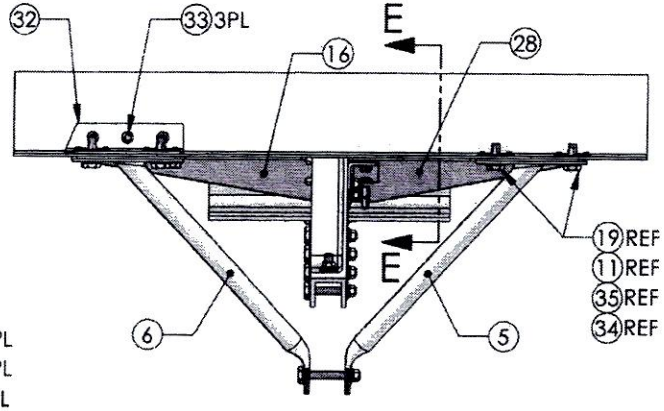

SECTION D-D
CUTTER HIDDEN FOR CLARITY

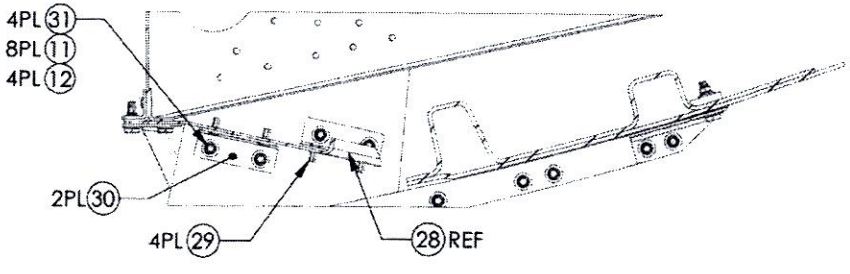

SECTION E-E

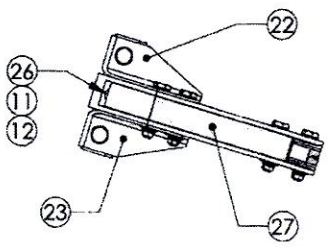

SECTION C-C

ORIGINAL DATE (MO-DA-YR) 08-27-08	DART AEROSPACE APICAL INDUSTRIES INC. dba DART AEROSPACE — 3030 ENTERPRISE CT., SUITE A, VISTA, CA. 92081, (760)-724-5300
DRAWN BY S. HUFF — CHECKED P. BRAVO	
DRAWING APPROVAL P. BRAVO 08-27-08	AS350 CABLE CUTTERS KIT
CONTRACT No	
UNLESS OTHERWISE SPECIFIED DIMENSIONS ARE IN INCHES TOLERANCES ARE: 2 PLACE DECIMALS ±.010 3 PLACE DECIMALS ±.005 ANGLES ± .5°	SIZE B — CAGE CODE 07M76 — DWG NO. 646.4000 — REV C
	SCALE NONE — SHEET 4 OF 5

DQA: _____ Date: _____

WORK ORDER NON-CONFORMANCE / UPDATE

QA Closed: Date: Work Order update only ☐

Work Order: _____

Part No. _____

NCR No.

DISPOSITION

Rework	☐
Scrap	☐
Use-as-is	☐
Suspected Unapproved	☐

AGAINST DEPARTMENT/PROCESS

Skid-tube	☐	Cross tube	☐	Water Jet	☐	Engineering	☐
Machining	☐	Small Fab	☐	Prod. Eng. Coor.	☐	Quality	☐
Thermoforming	☐	Finishing	☐	Rec/Store/Packaging	☐	Other	☐
Large Fab	☐	Composite	☐	Supplier	☐		☐

Date :	Step #:	QTY Effective :	MRB (QSI042) Approval

Description Work Order Deviation	Disposition	Completed By
		Lead hand / Supervisor Approval Verification
		QC / QA Coordinator Approval

Root Cause

Environment	☐	☐	No Re-verfication
Design	☐	☐	Operator
Doc/Data	☐	☐	Offset/Setup
Equip/Tooling	☐	☐	Supplier
Handling/Pre	☐	☐	Training
Material	☐	☐	Use for Testing
Internal Transport	☐	☐	Poor Information
Tribal Knowledge	☐	☐	Rushing
LOA	☐	☐	Product Improvement
Substation	☐	☐	Process Improvement
Past Expiry Date	☐	☐	Manufacturing Process
Misidentified	☐	☐	Past Due

FAULT CATEGORY

☐	Pressure/Forced	☐	Temperature/Cure	☐	Power Loss/Surge	☐	Positioned Wrong
☐	Bending	☐	Set-up	☐	Folio/Program	☐	Outside Dimensions
☐	Centre Not Concentric	☐	BOM/Route	☐	Grain	☐	Over/Under tolerance
☐	Cracks	☐	Broken/Damage/Defect	☐	Weld	☐	Part Incorrect
☐	Crimp/Kink/Ripple/Wave	☐	Inspection Incomplete/Unqualified	☐	Wrong Stock Pulled	☐	Part Lost/Missing
☐	Cuffs	☐	Contamination	☐	Out of Sequence	☐	Part Moved
☐	Crushing	☐	Countersink	☐	Off-set	☐	Drawing
☐	Heat Treat	☐	Cut Too Short	☐	Mislabeled	☐	Finish
☐	Wave/Twist in Tube	☐	Instructions Incomplete/Unclear	☐	Fit/Function	☐	Misread
☐	Marks/Chatter	☐	Drill Holes	☐	Misaligned/off center	☐	Turning Sequence

☐ OTHER :

THE INFORMATION CONTAINED IN THIS DRAWING IS THE SOLE PROPERTY OF APICAL INDUSTRIES DBA DART AEROSPACE. ANY REPRODUCTION IN PART OR WHOLE WITHOUT THE EXPLICIT WRITTEN PERMISSION OF APICAL INDUSTRIES DBA DART AEROSPACE IS PROHIBITED.

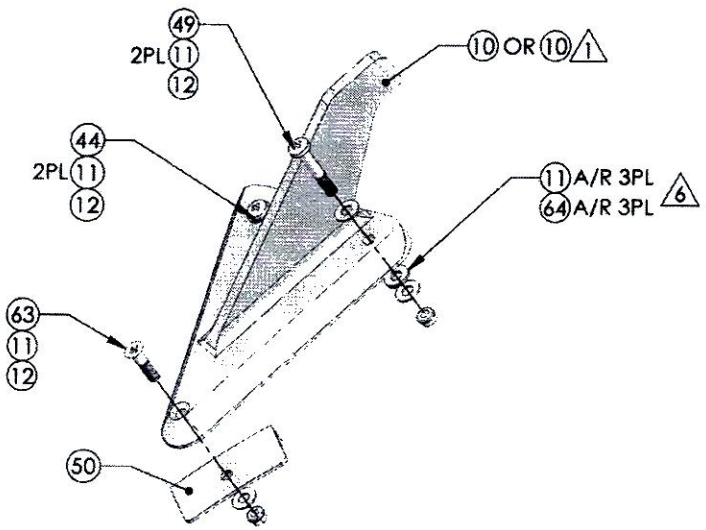

DETAIL C
LH SHOWN EXPLODED
RH OPPOSITE

ORIGINAL DATE (MO/DA/YR)	08-27-08
DRAWN BY	S. HUFF
CHECKED BY	P. BRAVO
DRAWING APPROVAL	P. BRAVO 08-27-08
CONTRACT NO.	

UNLESS OTHERWISE SPECIFIED DIMENSIONS ARE IN INCHES
TOLERANCES ARE:
2 PLACE DECIMALS ±0.10
3 PLACE DECIMALS ±0.05
ANGLES ± .5°

DART AEROSPACE
APICAL INDUSTRIES, INC
dba DART AEROSPACE
3030 ENTERPRISE CT.
SUITE A
VISTA, CA. 92081
(760)-724-5300

AS350 CABLE CUTTERS KIT

SIZE	CAGE CODE	DWG. NO.	REV.
B	07M26	646.4000	C

SCALE NONE | SHEET 5 OF 5

DQA: _____ Date: _____

WORK ORDER NON-CONFORMANCE / UPDATE

QA Closed: Date:

Work Order update only ☐

Work Order: _____

Part No. _____

NCR No.

DISPOSITION

Rework	☐
Scrap	☐
Use-as-is	☐
Suspected Unapproved	☐

AGAINST DEPARTMENT/PROCESS

Skid-tube	☐	Cross tube	☐	Water Jet	☐
Machining	☐	Small Fab	☐	Prod. Eng. Coor.	☐
Thermoforming	☐	Finishing	☐	Rec/Store/Packaging	☐
Large Fab	☐	Composite	☐	Supplier	☐

Engineering	☐		
Quality	☐		
Other	☐		

Date :	Step #:	QTY Effective :	MRB (QSI042) Approval

Description Work Order Deviation	Disposition	Completed By
		Lead hand / Supervisor Approval Verification
		QC / QA Coordinator Approval

Root Cause

Environment	☐	☐	No Re-verfication
Design	☐	☐	Operator
Doc/Data	☐	☐	Offset/Setup
Equip/Tooling	☐	☐	Supplier
Handling/Pre	☐	☐	Training
Material	☐	☐	Use for Testing
Internal Transport	☐	☐	Poor Information
Tribal Knowledge	☐	☐	Rushing
LOA	☐	☐	Product Improvement
Substation	☐	☐	Process Improvement
Past Expiry Date	☐	☐	Manufacturing Process
Misidentified	☐	☐	Past Due

FAULT CATEGORY

☐ Pressure/Forced	☐ Temperature/Cure	☐ Power Loss/Surge	☐ Positioned Wrong
☐ Bending	☐ Set-up	☐ Folio/Program	☐ Outside Dimensions
☐ Centre Not Concentric	☐ BOM/Route	☐ Grain	☐ Over/Under tolerance
☐ Cracks	☐ Broken/Damage/Defect	☐ Weld	☐ Part Incorrect
☐ Crimp/Kink/Ripple/Wave	☐ Inspection Incomplete/Unqualified	☐ Wrong Stock Pulled	☐ Part Lost/Missing
☐ Cuffs	☐ Contamination	☐ Out of Sequence	☐ Part Moved
☐ Crushing	☐ Countersink	☐ Off-set	☐ Drawing
☐ Heat Treat	☐ Cut Too Short	☐ Mislabeled	☐ Finish
☐ Wave/Twist in Tube	☐ Instructions Incomplete/Unclear	☐ Fit/Function	☐ Misread
☐ Marks/Chatter	☐ Drill Holes	☐ Misaligned/off center	☐ Turning Sequence

☐ OTHER :

REFERENCE ONLY

THE INFORMATION CONTAINED IN THIS DRAWING IS THE SOLE PROPERTY OF APICAL INDUSTRIES DBA DART AEROSPACE. ANY REPRODUCTION IN PART OR WHOLE WITHOUT THE EXPLICIT WRITTEN PERMISSION OF APICAL INDUSTRIES DBA DART AEROSPACE IS PROHIBITED.

NOTES:

1. AFTER INSTALLATION, APPLY F/N 54 A/R TO FILL GAPS AND FILLET EDGES.
2. INSTALL F/N 14 WITH F/N 52 & 53.
3. 3M VHB ADHESIVE TAPE .025" THICK X .50" WIDE
   VENDOR: McMASTER-CARR P/N 75935A651.
4. 3M TAPE PRIMER 94, APPLY TO BOTH SURFACES A/R BEFORE TAPE.
   VENDOR: R.S. HUGHES P/N 021200-24216.
5. REUSE FASTENERS FROM F/N 1.
6. USE WASHERS A/R AS SHIMS TO OBTAIN BEST FITMENT.
7. AT CUSTOMERS OPTION, INSTALL F/N 65 BY MATCH DRILLING ON TO F/N 1.
8. INSTALL SHIM IF OEM PROVISIONS ARE INSTALLED ON AIRCRAFT. REMOVE SHIM LAYERS TO ACHIEVE CORRECT SIZE. MATCH DRILL HOLES. USE F/N 78 SCREW IN PLACE OF F/N 17 SCREW.
9. NEWER INSTALLATIONS ON AIRCRAFT WITH UPDATED CANOPY MAY REQUIRE DIFFERENT LENGTH SCREWS. USE F/N 62 TO REPLACE F/N 44 & F/N 26 IN PLACE OF F/N 41 WHEN NECESSARY.

UNINCORPORATED ECN(s)

05304

REVISIONS			
REV.	DESCRIPTION	DATE	APPROVED
A	INCORPORATED ECNs 02799, 02851, 02719 & 02765	12/08/2010	P. BRAVO
B	INCORPORATED ECN 03044, 03079 & 04731	11/04/2014	P. BRAVO
C	INCORPORATED ECN 05098	09/08/2015	P. BRAVO

.4006	.4005	.4004	.4003	.4002	.4001	FIND #	PART #	DESCRIPTION	MATL	SPEC.
	5		5		5	78	601.3875	SCREW	MS24694S54	
	1		1		1	77	646.9410	SHIM	4	
			4		4	76	601.2764	WASHER	NAS1149F0832P	
			2		2	75	601.2973	LOCKNUT	MS21042-08	
			2		2	74	601.2988	SCREW	MS27039-0813	
			2		2	73	601.2943	LOCKNUT	MS21042-3	
			2		2	72	601.3128	NUT	AN316C4R	
			2		2	71	601.3209	LOCKNUT	MS21042L4	
			4		4	70	601.2638	WASHER	NAS1149F0432P	
			2		2	69	601.2669	BOLT	AN4C7A	
			2		2	68	601.3119	CLEVIS	AN665-348	
			2		2	67	601.3121	EYE BOLT	AN44-5A	
			2		2	66	650.9201	EYE BRACKET ASSY		
		REF	REF		REF	65	647.5701	GPS MOUNT KIT	4	
					2	64	601.3151	WASHER	NAS1149F0363P	
				2		63	601.2911	SCREW	MS24689S63	
			24		24	62	601.2637	SCREW	MS27039 T 16	
	2		2		2	61	601.2763	BOLT	AN3-12A	
			1		1	60	646.3913	SHIM		
			4		4	59	646.3912	SHIM		
			1		1	58	646.3911	SHIM		
			4		4	57	646.3910	SHIM		
			5		5	56	600.1013	PRIMER		
			8 FT		8 FT	55	600.0129	VHB TAPE		
			1	1	1	54	600.1012	SEALANT	PR-1425 CLASS B	
			1		1	53	600.0991	MAGNOBOND 6398 PART B	4	
			1		1	52	600.0990	MAGNOBOND 6398 PART A	3	
	6		10		10	51	601.2826	BOLT	AN3-11A	
				2		50	646.3814	WIPER BRACKET		
				2		49	601.2910	SCREW	MS27039-1-10	
		2			2	48	601.1365	SCREW	MS27039-1-10	
		2			2	47	646.3719	DOUBLER		
			2		2	46	646.3718	CUSTOM WASHER		
		1			1	45	646.3717	DOUBLER		
			22	2	22	44	601.1948	SCREW	MS27039-1-19	
			2		2	43	601.1952	SCREW	MS27039-1-20	
			4		4	42	601.1956	SCREW	MS27039-1-21	
				2		41	601.2829	SCREW	MS24694S54	
			2		2	40	601.2831	RIVET	MS20426AD5-7	
			1		1	39	646.3716	GAUGE BRACKET		
			6		6	38	601.1953	SCREW	MS27039-1-12	
		2			2	37	646.3715	STRUT DOUBLER		
	2		2		2	36	601.2824	BOLT	AN3-5A	
12		36			36	35	601.2277	RIVET	CCR2045S-3-02	
6		18			18	34	600.0795	NUTPLATE	MS21047-3	
3		3			3	33	601.2565	RIVET	MS20470AD5-7	
1		1			1	32	646.3813	STRUT BRACKET		
4		4			4	31	601.2822	BOLT	AN3-5A	
2		2			2	30	646.3812	GUSSET BRACKET		
8		8			8	29	601.2564	RIVET	MS20470AD5-6	
1		1			1	28	646.3714	GUSSET		
	1		1		1	27	646.3610	FILLER		
	3		3		3	26	601.2830	SCREW	MS24694S55	
	2		2		2	25	601.2825	BOLT	AN3-6A	
	1		1		1	24	646.3811	RADIUS BLOCK		
	1		1		1	23	646.3712	CLIP		
	1		1		1	22	646.3711	CLIP		
8		8			8	21	601.2832	RIVET	MS20470AD5-5.5	
14		14			14	20	601.2020	RIVET	CR3213-5-3	
4	6	4	6		10	19	601.2823	BOLT	AN3-4A	
	1		1		1	18	601.2827	BOLT	AN5-13A	
	5		5		5	17	601.2912	SCREW	MS24694S51	
1		1			1	16	646.3713	GUSSET		
1		1			1	15	646.3210	SUPPORT		
		1			1	14	646.3710	DOUBLER		
	1		1		1	13	646.3110	CHANNEL		
14	10	8	53	6	61	12	601.1624	LOCKNUT	MS21042L3	
16	32	18	120	16	144	11	601.1607	WASHER	NAS1149F0332P	
				1		10	646.3410	LH WIPER DEFLECTOR		
				1		9	646.3411	RH WIPER DEFLECTOR		
			2		2	8	647.7703	STRUT ASSY		
			2		2	7	647.0112	STRUT BRACKET		
	1		1		1	6	646.3511	STRUT		
	1		1		1	5	646.3510	STRUT		
2		2			2	4	646.3810	BRACKET		
			1		1	3	646.2910	DEFLECTOR		
	1		1		1	2	646.3001	LOWER CUTTER ASSY		
			1		1	1	646.3301	UPPER CUTTER ASSY		
X							646.4006	LOWER CUTTER FIXED PROVISIONS		
	X						646.4005	LOWER CUTTER REMOVABLE PROVISIONS		
		X					646.4004	FIXED PROVISIONS KIT		
			X				646.4003	CABLE CUTTERS KIT WITHOUT FIXED PROVISIONS		
				X			646.4002	AS350 WIPER DEFLECTOR KIT		
					X		646.4001	AS350 CABLE CUTTERS KIT		

QTY | PARTS LIST

NEXT ASSY (S)

ORIGINAL DATE (MM-DD-YR): 08-27-08
DRAWN BY: S. HUFF
CHECKED BY: P. BRAVO
DRAWING APPROVALS: P. BRAVO
ENGINEER:
QUALITY:

UNLESS OTHERWISE SPECIFIED DIMENSIONS ARE IN INCHES
TOLERANCES ARE:
2 PLACE DECIMALS ±.010
3 PLACE DECIMALS ±.005
ANGLES ± 5°

SIZE B

DART AEROSPACE
APICAL INDUSTRIES, INC. dba DART AEROSPACE
3030 ENTERPRISE CT., SUITE A
VISTA, CA. 92081
(760)-724-6300

AS350 CABLE CUTTERS KIT

SHT	CAGE CODE	DWG. NO.	REV.
B	07M26	646.4000	C

SCALE NONE | SHEET 1 OF 5

Work Order ID 161337

161337

Thursday, May 11, 2017 1:51:40 PM

Item ID: 646.4002 **Accept** *N900040100* **Setup Start** *NS1*

Revision ID: **Stop** *NS2*

Item Name: AS350 Wiper Deflector

Start Date: 5/11/2017 **Start Qty:** 1.00 *1* **Cust Item ID:**

Required Date: 5/18/2017 **Req'd Qty:** 1.00 *1* **Customer:**

Reference: SCHEDULED/C

Run Start *NR1*

Approvals: **Process Plan:** _____ **Date:** MAY 1 1 2017 **Tooling:** _____ **Date:** _____ **Stop** *NR2*

QC: _____ **Date:** _____ **SPC (Y/N):** _____ **Date:** _____

Sequence ID/ Work Center ID	Operation Description	Set Up/ Run Hours	Tool ID	Tool #	Plan Code	Accept Qty	Reject Qty	Reject Number	Insp. Stamp
Draw Nbr 646.4000	**Revision Nbr** C1								
100	Document Control	0.00							
100	DOCUMENT CONTROL					CB			MAY 1 2 2017
DC	**Memo**	0.00							
Doc.Control -USB or Paperwork	Photocopy bluefile & type labels per PPP 646.4002								
110	Pick Kit	0.00							
110									
Packaging	**Memo**	0.00							
Packaging									
120	QC4- 100% Inspect kits for completeness	0.00							
120									
QC	**Memo**	0.00							
Quality Control									

Transport Canada Transports Canada

Department of Transport

Supplemental Type Certificate

This approval is issued to:

Apical Industries Inc.
2608 Temple Heights Drive
Oceanside, California
United States of America 92056-3512

Number: SH09-10
Issue No.: 1
Approval Date: March 18, 2009
Issue Date: March 18, 2009

Responsible Office:	Pacific
Aircraft/Engine Type or Model:	EUROCOPTER FRANCE AS 350 B2, AS 350 BA, AS 350B, AS 350B1, AS 350B3, AS 350D, AS 350D1
Canadian Type Certificate or Equivalent:	H-83
Description of Type Design Change:	Installation of a Cable Cutter Kit in accordance with FAA STC SR02180LA

Installation/Operating Data, Required Equipment and Limitations:

Installation of a Cable Cutter Kit in accordance with FAA approved Apical Master Document list, MD350-61, Revision A, dated November 25, 2008, or later FAA approved revision.

This approval requires the inspections and overhaul schedules to be performed as mandated by Apical Industries, Inc.'s Instructions for Continued Airworthiness, ICA350-61, Revision N/C, dated November 29, 2008, or later FAA accepted revision.

A copy of this Certificate must be included in the permanent records of the modified aircraft.

– End –

Conditions: This approval is only applicable to the type/model of aeronautical product specified therein. Prior to incorporating this modification, the installer shall establish that the interrelationship between this change and any other modification(s) incorporated **will not** adversely affect the airworthiness of the modified product.

Michael Chan
For Minister of Transport

Canada